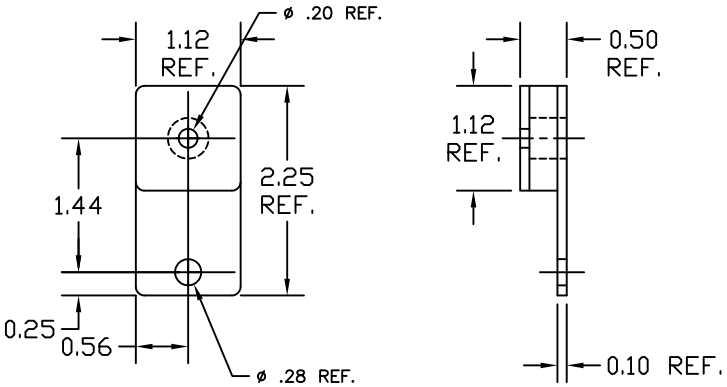

Mounting Feet, 6"–10" Drives
Small, P/N 96–1–11

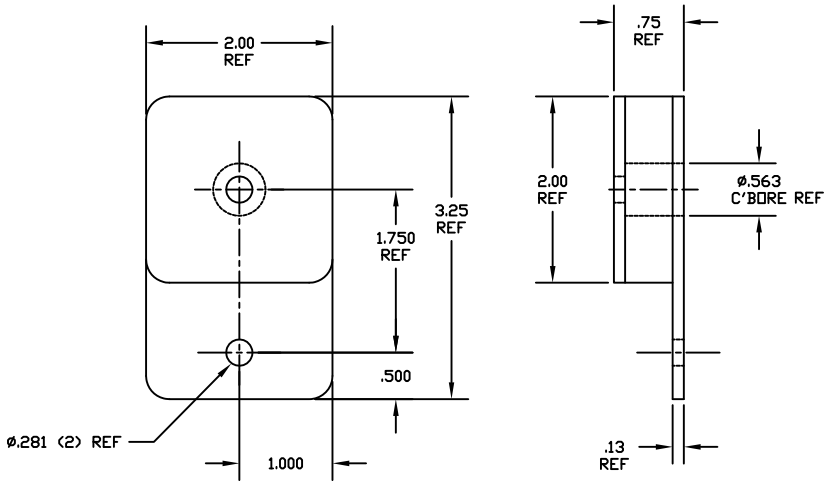

Mounting Feet, 12"–18" Drives
Medium, P/N 96–1–10

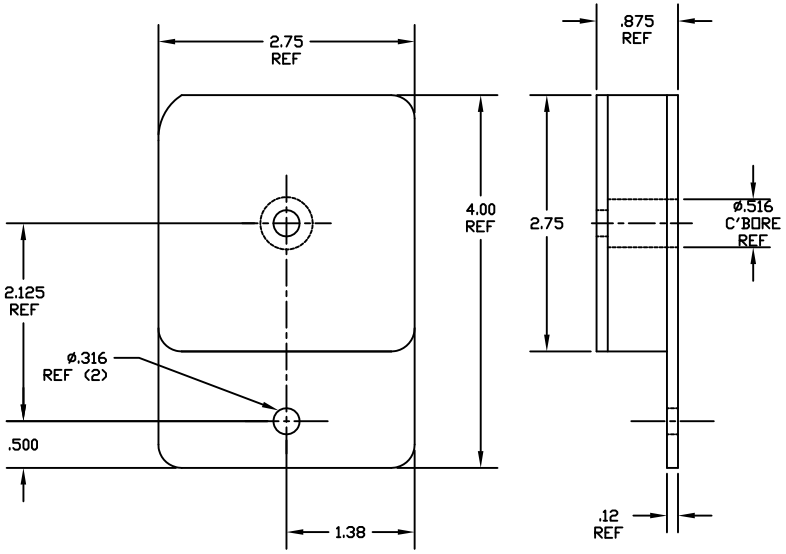

Mounting Feet, 21"–36" Drives
Large, P/N 96–1–12

RODIX, INC. ROCKFORD, ILLINOIS	
PROJECT	RODIX STANDARD
PART OR ASSY NAME	Mounting Feet
SHEET 1 OF 1	DWG NO Mounting Feet