RODIX INC.

2316 23rd Ave
Rockford, IL 61104
Toll Free (800) 562-1868
Phone (815) 316-4700
Fax (815) 316-4701
E-mail custserve@rodix.com
Website www.rodix.com

CONTROL PRODUCTS FOR INDUSTRY

2 CUBIC FOOT STRAIGHT FRONT VIBRATORY HOPPER

11 ga C.R.S. with Primed Finish, 120V Coil installed	P/N 026-500-0123
11 ga C.R.S. with Primed Finish, 240V Coil installed	P/N 026-550-0123
304 S.S. with Bead Blast Finish, 120V Coil installed	P/N 026-500-0125
304 S.S. with Bead Blast Finish, 240V Coil installed	P/N 026-550-0125

Our hoppers are manufactured using the finest materials and components and are delivered beautifully finished, assembled, and ready for installation.

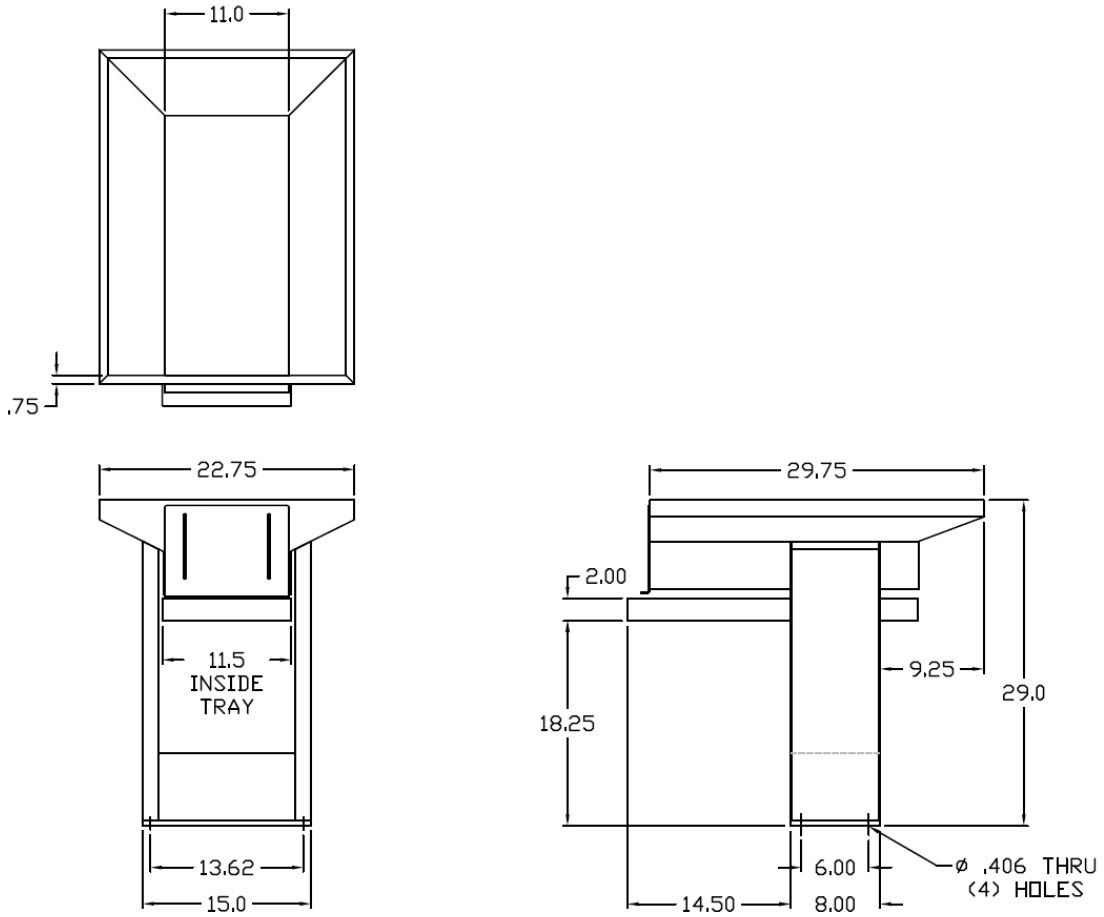

Dimensions are for reference only

Optional: Photoelectric Parts Level Sensor P/N 111-000-0521

For special hopper sizes, styles, 316 SS or other special requests, please call or email today for a quote.
Pricing is available by registering at www.rodix.com